8. Exploded Views and Parts List (SCX-4200/XAA)

Contents

8.1 Main Exploded View 8-2
8.2 Housing Base Exploded View 8-3
8.3 Frame Assembly Exploded View 8-4
8.4 Fuser Unit Exploded View 8-5
8.5 Drive Assembly Exploded View 8-6
8.6 Scan Assembly Exploded View 8-7
8.7 OPE Assembly Exploded View 8-8
8.8 Cassette Assembly Exploded View 8-9

Part Number & Description format.

Part numbers and descriptions are defined according to a company standard. The information below will help you to understand the part number format and assist when ordering spare parts.

• **There are two types of Part number format.**

●●●●–●●●●●●	ex) 2007-007961	R-CHIP
■■●●–●●●●●■ (It shows part specific)	ex) JB96-01268A	ELA UNIT-COVER TOP

(● : number ■ : letter)

Type 1 : This format is used throughout Samsung on all product ranges.
Typically it is used for small components and electronic parts.

Type 2 : This format is controlled by individual Samsung Divisions and is used on specific products, typically for mechanical parts. Type 2 format part numbers fall into 2 categories:

• **A/S privately used part :** It is only used for A/S .

• **Ass'y part :** Assemblies consisting of 2 or more parts. Also used for Service manuals, user guides and diagrams.

• Ass'y parts and A/S privately used Parts can be distinguished by the part Code and Description. They are always Type 2 format. The 2 leading characters indicate private or assembly parts.

DIVISION	PART CODE	DESCRIPTION
A/S Private	**81-****** (JB81-00039A)	AS-********** (AS-USE)
ASS'Y Part	**75-****** (JB75-00068A)	MEC-******** (MEC-CHUTE)
ASS'Y Part	**92-****** (JB92-01131A)	PBA ********* (PBA MAIN-CONTROLLER)
ASS'Y Part	**97-****** (JB97-01089A)	MEA ********* (MEA UNIT-PULLEY IDLE)

8.1 Main Exploded View

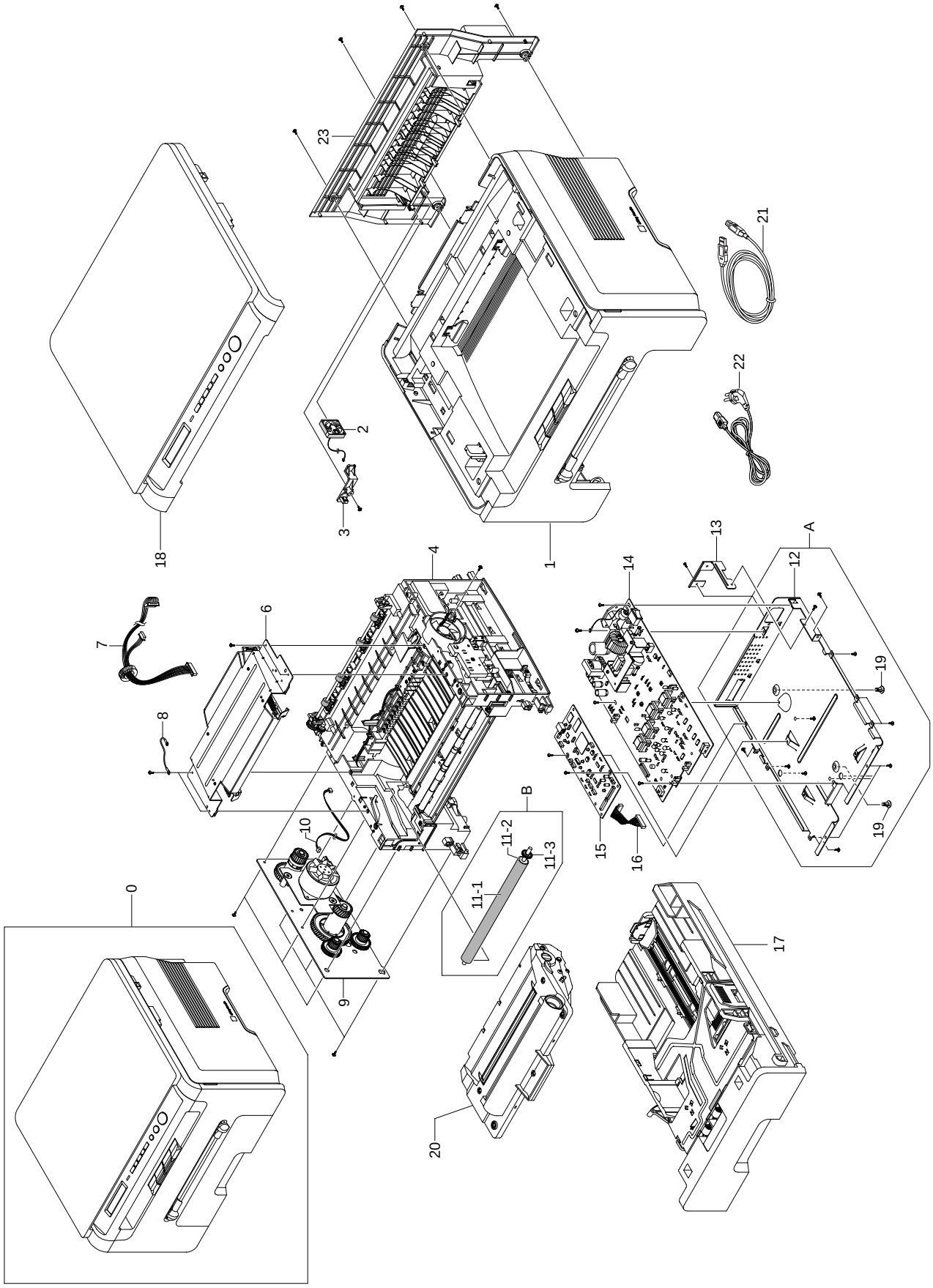

8.2. Housing Base Exploded View

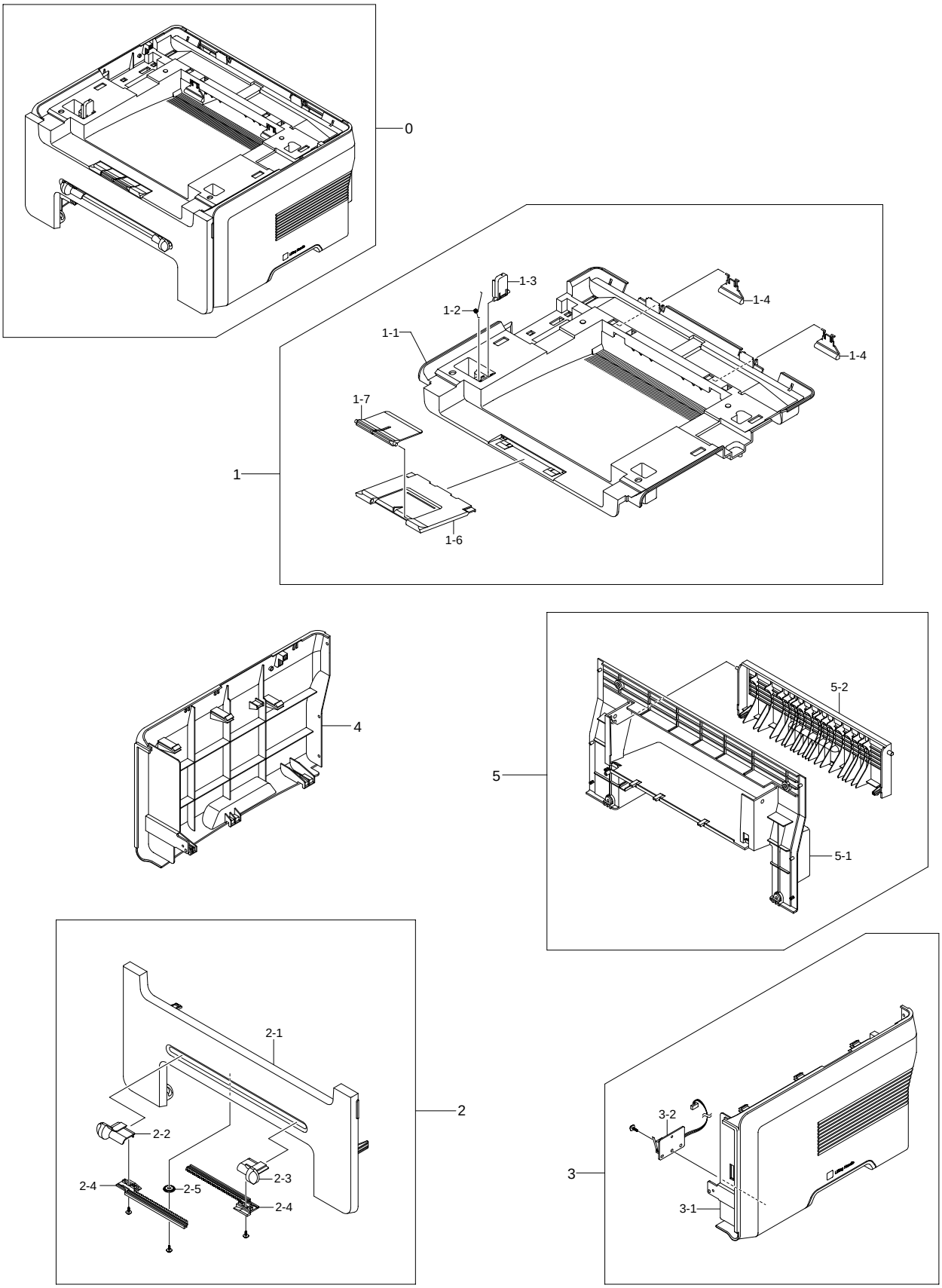

8.3. Frame Assembly Exploded View

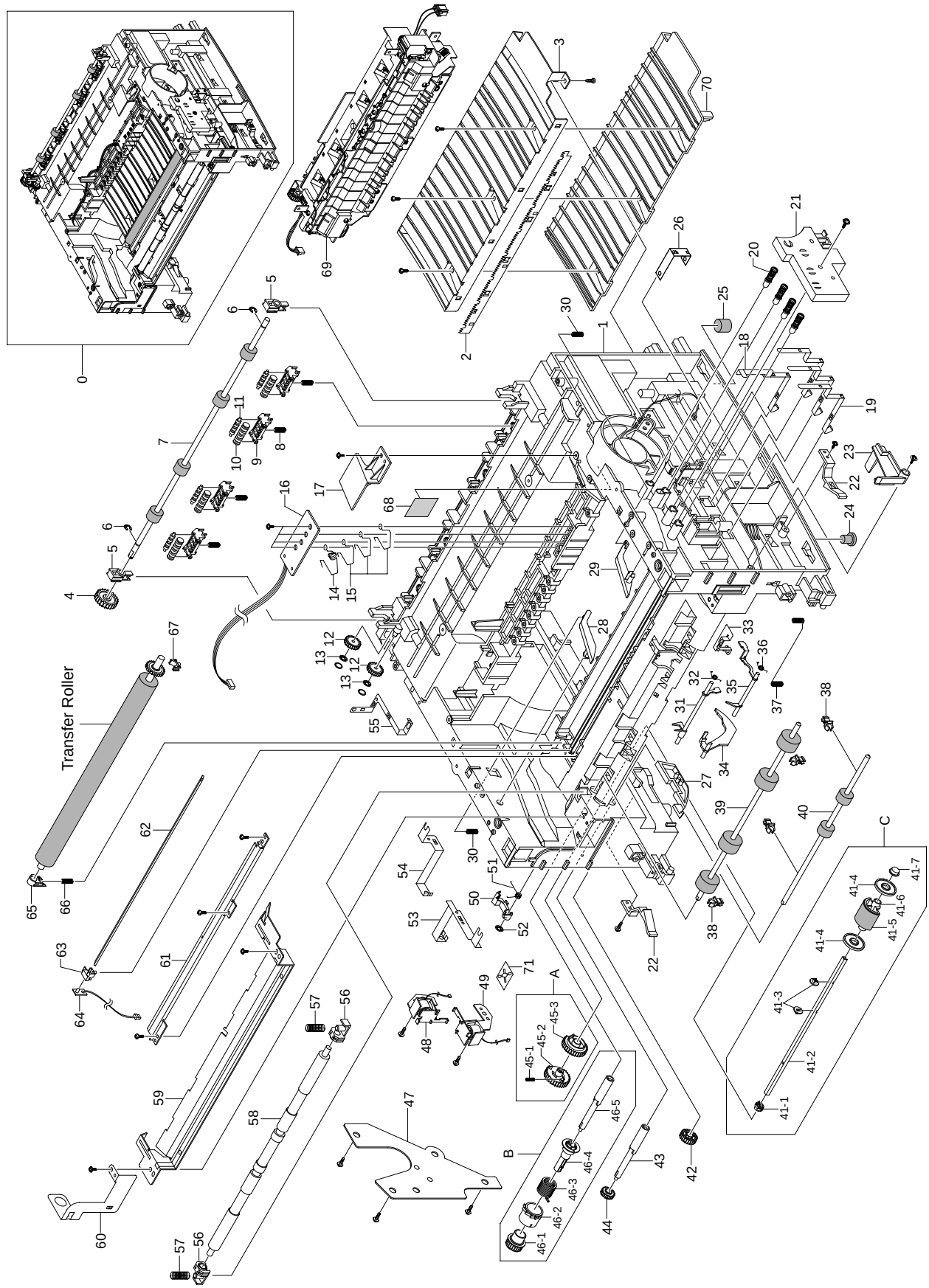

8.4. Fuser Unit Exploded View

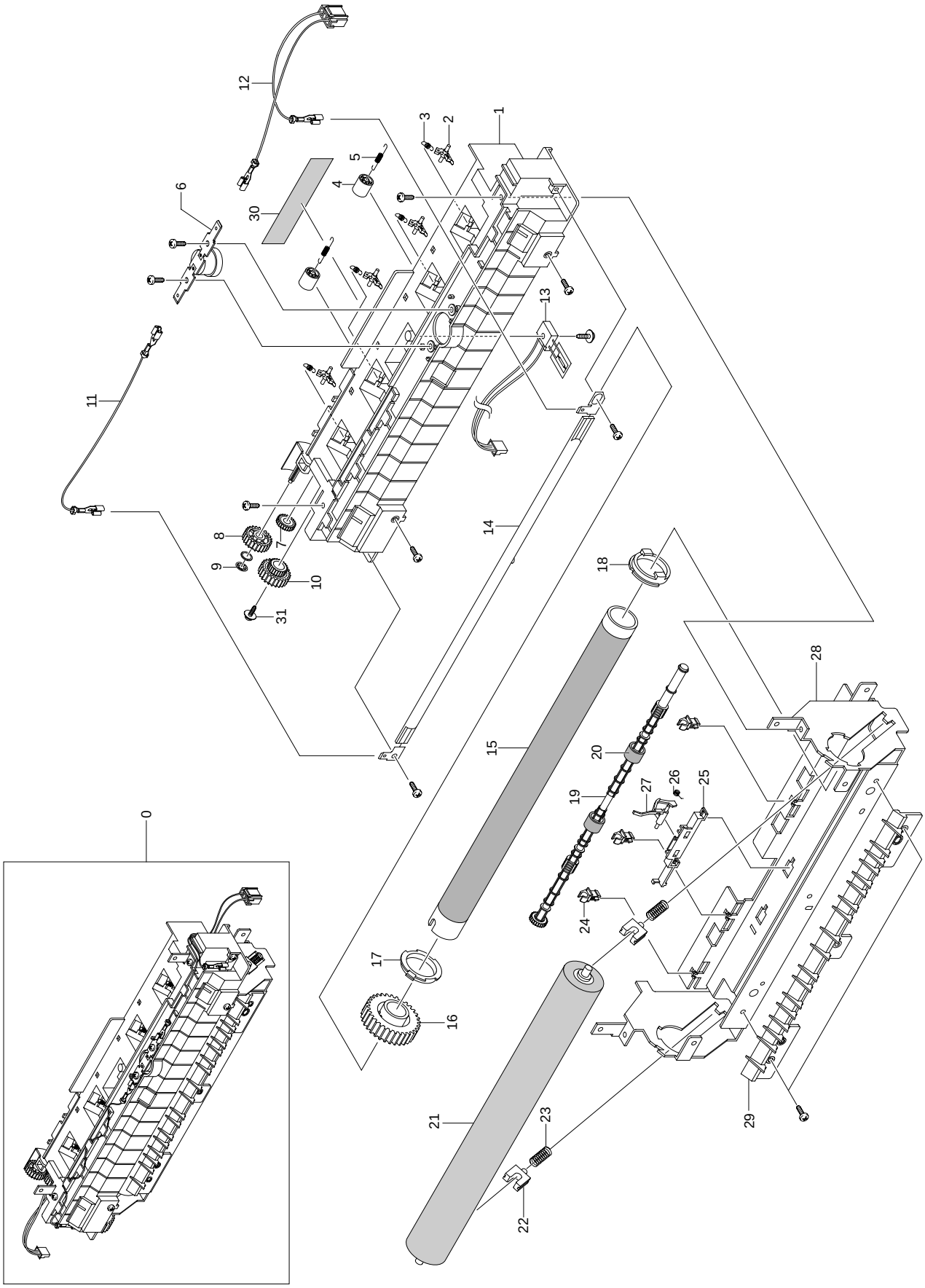

8.5. Drive Assembly Exploded View

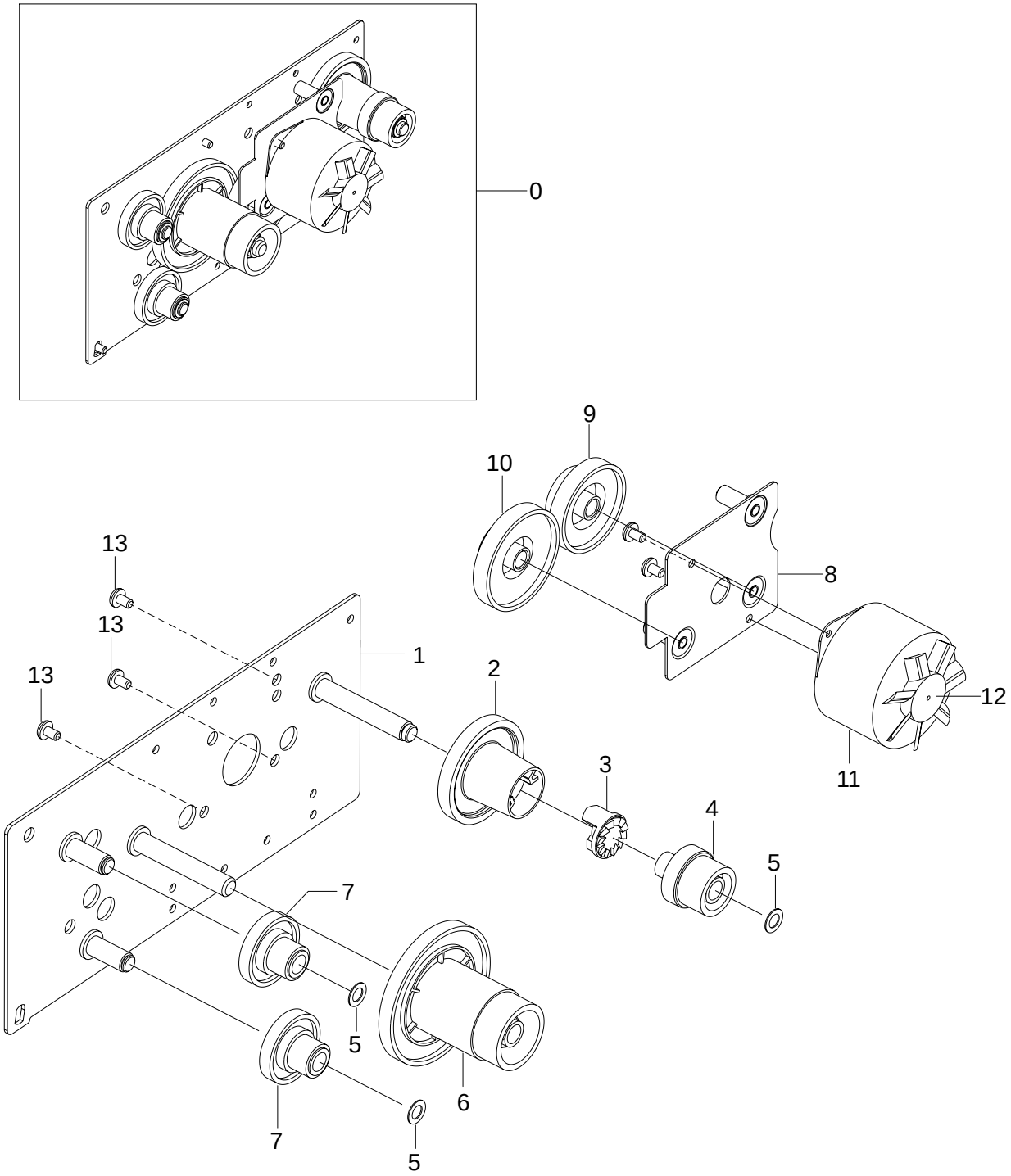

8.6. Scan Assembly Exploded View

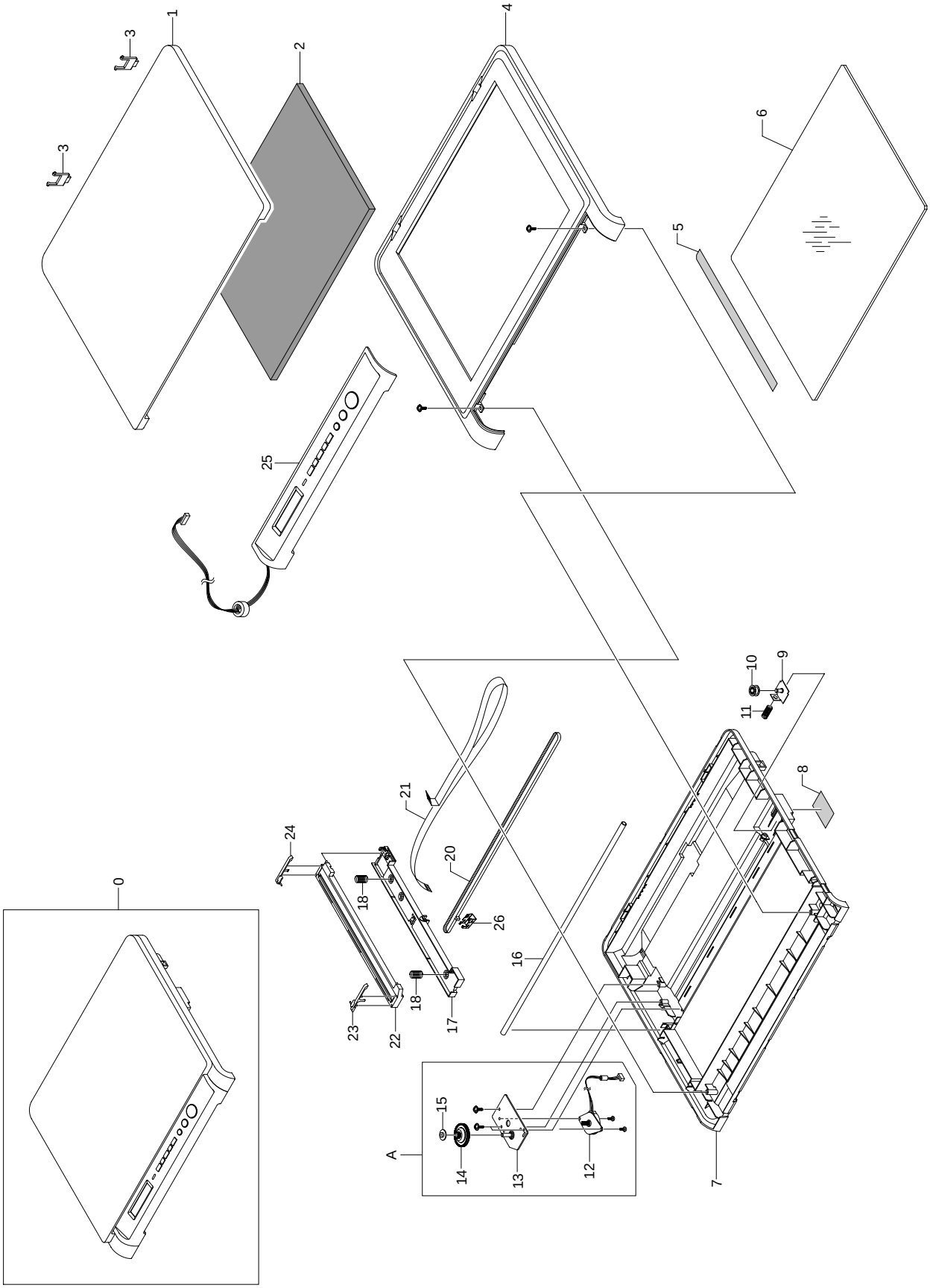

8.7. OPE Assembly Exploded View

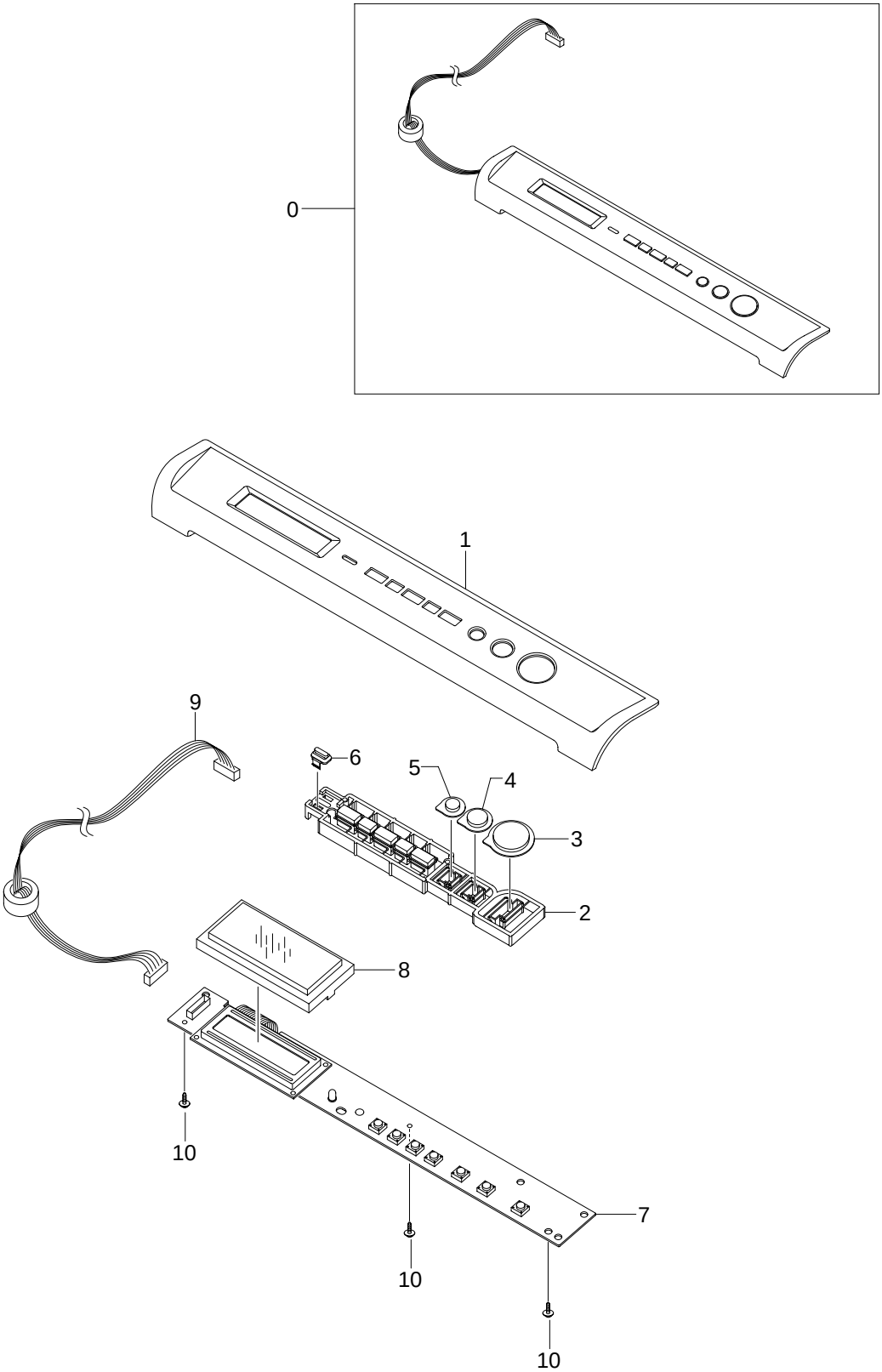

8.8. Cassette Assembly Exploded View

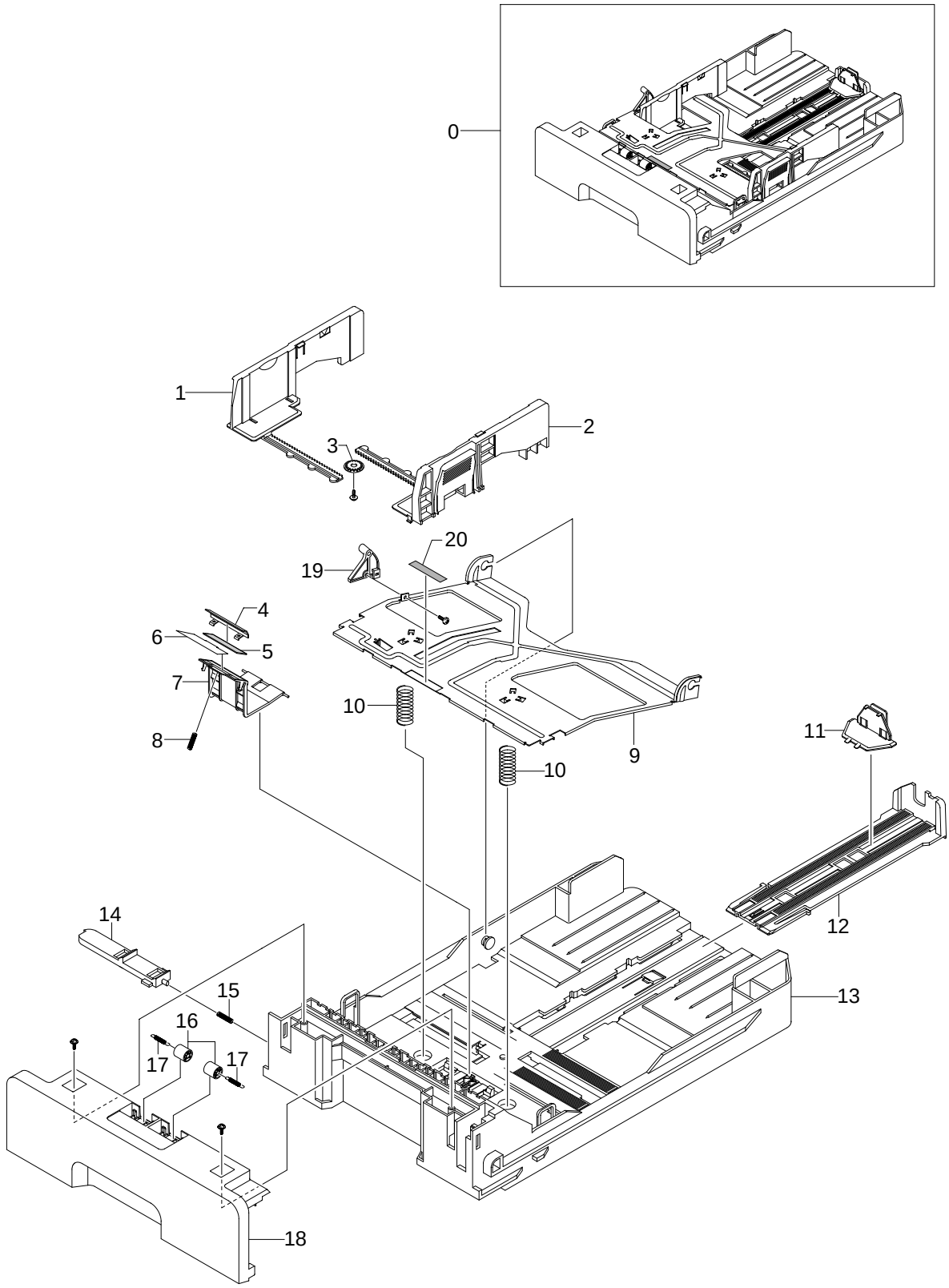

Model code : SCX-4200/XAA

SA : SERVICE AVAILABLE **SNA** : SERVICE not AVAILABLE

Draw#	Part Code	Description	Location	SNA
8.1-1	JC96-03807A	ELA HOU BASE-HOUSING;SCX-4200,SEC,-,-,-,		SNA
8.1-2	3103-001085	FAN-DC;24V,80mA,4800rpm,-,0.131mmH20		SA
8.1-3	JC61-01643A	HOLDER-M_HARNESS;SCX-4200,ABS, HB,2.0,15		SA
8.1-4	JC96-03821A	ELA UNIT-FRAME LOWER;SCX-4200,SAMSUNG,-,		SA
8.1-5	JC31-00004A	FAN-DC_HAWK;ML-6060,24.0V,2800rpm,15m^3/	F5018	SA
8.1-6	JC59-00018C	UNIT-HUMMING_VE LSU;SCX-4100,-,-,600 DPI	L7043	SA
8.1-7	JB39-40532A	CBF HARNESS-OPE;SF3000,CBF,UL1007,-,100,	E2002	SA
8.1-8	JC39-00242A	CBF HARNESS-LSU;ML-1710,#26,UL 1061,5/7/	L7002	SA
8.1-9	JC96-03823A	ELA UNIT-DRIVE;SCX-4200,SAMSUNG,-,110V/2		SA
8.1-A	JC97-01792A	MEA UNIT-SHIELD ENGINE;ML-1710,SAMSUNG,-	E2098	SA
8.1-10	JC39-00241A	CBF HARNESS-MOTOR;ML-1710,CBF,UL 1061,4P	M2053	SA
8.1-11-1	JC66-01218A	ROLLER-TRANSFER;SCX-4200,NBR+ECO,15,219M		SA
8.1-11-2	JC72-00851A	PPR-SPACER_TR;ML-1210,*,TEFLON,V0,-,NTR,		SNA
8.1-11-3	JC66-00395A	GEAR-TRANSFER;ML-1710,POM(M90-44),-,-,-,	G0448	SA
8.1-12	JC63-00107A	SHIELD-P-ENGINE;ML-1400,SECC,0.8,291.6,2	E2108	SNA
8.1-13	JC61-00601A	BRACKET-P-INLET;ML-1400,SECC,1,124.8,28.	B4027	SA
8.1-15	JC92-01762A	PBA MAIN-CONTROLLER;SCX-4200,SEC,-,-,-,-		SA
8.1-16	JC39-00240A	CBF HARNESS-ENGINE;ML-1710,CBF,UL1061,26	H1070	SA
8.1-17	JC97-02436A	MEA UNIT-CASSETTE;SCX-4200,SEC,-,-,110/2		SA
8.1-18	JC96-03822A	ELA UNIT-SCANNER;SCX-4200,-,-,-,-,-,-		SA
8.1-19	6103-001056	SUPPORTER;DASC-8N,L11,NATUAL,NYLON 6/6		SNA
8.1-20	JC96-03825A	ELA UNIT-DEVE;SCX-4200,SEC,-,1K,-,-,0.65		SNA
8.1-22	3903-000085	CBF-POWER CORD;DT,US,BP3/YES,I(IEC C13/C		SA
8.1-23	JC97-02434A	MEA UNIT-COVER REAR;SCX-4200,SEC,-,-,-,-		SA
8.2-1	JC97-02433A	MEA UNIT-COVER MIDDLE;SCX-4200,SEC,-,-,-		SA
8.2-1-1	JC63-01008A	COVER-M-MIDDLE;SCX-4200,HIPS,T2.2,393.6,		SA
8.2-1-2	JC61-00026A	SPRING ETC-TS-CHARGE APOLLO;SF-5100,SUS3		SNA
8.2-1-3	JC61-00949A	STOPPER-M-LEVER;SCX-4100,PC,T2.5,19.5,31		SA
8.2-1-4	JC72-01343A	PMO-SUB_M_STACKER;ML-1520,PC,BLACK,39*25		SA
8.2-1-5	JC72-00977A	PMO-ACTUATOR MANUAL;ML-1710,PC NH-1023P,	K3817	SA
8.2-1-6	JC61-01644A	STACKER-M-LARGE;SCX-4200,HIPS,1.8,100,55		SA
8.2-1-7	JC61-01645A	STACKER-M-SMALL;SCX-4200,HIPS,1.7,50,33.		SA
8.2-2	JC97-02435A	MEA UNIT-COVER FRONT;SCX-4200,SEC,-,-,-,		SA
8.2-2-1	JC63-01009A	COVER-M-FRONT;SCX-4200,HIPS,T2.2,405.4,1		SA
8.2-2-2	JC70-00476B	ADJUST-M_MANUAL_L;SCX-4200,HIPS HB(HR-13		SA
8.2-2-3	JC70-00477B	ADJUST-M_MANUAL_R;SCX-4200,HIPS HB(HR-13		SA
8.2-2-4	JC70-00304A	ADJUST RACK-M-MANUAL;ML-1710,POM(F20-03)	K2007	SA
8.2-2-5	JC66-00387A	GEAR-RACK_PINION;ML-1710,POM(M90-44),-,-	G0378	SA
8.2-3	JC97-02432A	MEA UNIT-COVER SIDE_R;SCX-4200,SEC,-,-,-		SA
8.2-3-1	JC63-01017A	COVER-M-SIDE R;SCX-4200,HIPS,T2.2,301.52		SA
8.2-3-2	JC92-01761A	PBA SUB-SWITCH;SCX-4200,SEC,-,-,-,-,-,33		SA
8.2-4	JC63-01018A	COVER-M-SIDE L;SCX-4200,HIPS,T2.2,301.52		SA
8.2-5-1	JC63-01011A	COVER-M-REAR;SCX-4200,HIPS,T2.2,367.4,19		SA
8.2-5-2	JC63-01012A	COVER-M-REAR DOOR;SCX-4200,ABS,T2.2,270.		SA
8.3-1	JC61-01651A	FRAME-M_BASE;SCX-4200,ABS(VE-0860P),-,-,		SA
8.3-2	JC61-00604A	PLATE-P-SAW;ML-1400,SUS304-CSP,0.15,15.1	P5152	SA
8.3-3	JC61-00594A	GUIDE-M-TR RIB;ML-1710,PC+ABS,-,-,-,BLK,	G2079	SA
8.3-4	JC66-00038A	GEAR-EXIT F/DOWN;ML-4500,POM,WHT,-,-	E4039	SA
8.3-5	JC61-00829A	HOLDER-BEARING EXIT F/DOWN;SCX-4216F,POM	H4009	SA
8.3-6	6044-000159	RING-C;ID3,OD7,T0.6,PASS,STSC		SA
8.3-7	JC66-01209A	ROLLER-EXIT F/DOWN;SCX-4200,SUM22+EPDM,1		SA
8.3-8	6107-001163	SPRING-CS;SUS304-WPB,-,PI0.4,D3.9,L13,-,	D4086	SA
8.3-9	JC61-00582B	HOLDER-M_EXIT F/DOWN;SCX-4200,PC(LS-1250		SA
8.3-10	JC72-41081B	PMO-M-ROLLER EXIT_MAIN 5;ML-1710,POM, 50		SNA
8.3-11	JC72-41082B	PMO-M-ROLLER EXIT_FR 500;ML-1710,POM, 50		SNA
8.3-12	JC72-00143A	PMO-GEAR_EXIT_DRV16;SF-5100,POM(DE8903),		SNA

SA : SERVICE AVAILABLE **SNA** : SERVICE not AVAILABLE

Draw#	Part Code	Description	Location	SNA
8.3-13	6031-001051	WASHER-PLAIN;M4,ID4.1,OD7.0,T0.13,*,POLY	S2004	SNA
8.3-13	6031-000019	WASHER-PLAIN;-,ID6.1,OD8.5,T0.1,BLK,POLY		SNA
8.3-13	6031-000022	WASHER-PLAIN;-,ID5.9,OD10.0,T0.13,BLK,PO		SNA
8.3-14	6107-001164	SPRING-TS;SUS304-WPB,-,PI0.15,D3.95,L12,		SA
8.3-14	6107-001238	SPRING-TS;SUS304-WPB,-,PI0.5,D2.4,L16.4,		SNA
8.3-15	6107-001165	SPRING-TS;SUS304-WPB,-,PI0.2,D4,-,-,-,ID		SNA
8.3-16	JC92-01786A	PBA SUB-CRUM;SCX-4200,SEC,KOREA,CRUM,-,-		SA
8.3-17	JC61-00937A	GUIDE-M-KNOCK UP;ML-1750,POM,-,77.8,20.8	P5146	SA
8.3-18	JC61-01652A	PLATE-P-TERMINAL CR;SCX-4200,SUS301-CSP		SA
8.3-19	JC70-00340A	IPR-P-TERMINAL DEVE KEY;SCX-4216F,SUS304	T2116	SNA
8.3-20	JC75-00049A	MEC-TERMINAL;SF-5100,SAMSUNG,-,-,-,-,-,-	K3739	SA
8.3-21	JC61-00911A	HOUSING-M-TERMINAL R2;SCX-4920N,ABS(NH-1	H6040	SA
8.3-22	JC72-00983A	PMO-LOCKER CST;ML-1710,POM(DELIN 900P),W	L6030	SA
8.3-23	JC72-00974A	PMO-ACTUATOR CVR OPEN;ML-1710,PC V0(NH10	O1073	SA
8.3-24	JC61-00836A	FOOT-FRONT;ML-1750,NBR,D7,-,11.5,-,-	F1011	SA
8.3-25	JC61-00835A	FOOT-BACK;ML-1750,NBR,D13.6,-,10.5,-,-	F1010	SA
8.3-26	JC70-00311A	IPR-P-GROUND_TR;ML-1710,SUS304-CSP,-,0.2	F4104	SNA
8.3-27	JC70-00312A	IPR-P-TERMINAL CON;ML-1710,SUS304-CSP,-,	K3385	SA
8.3-28	JC72-00984A	PMO-PLATE GUIDE DEVE_L;ML-1710,POM(M90-4	G2285	SA
8.3-29	JC72-00985A	PMO-PLATE GUIDE DEVE_R;ML-1710,POM(M90-4	G2286	SA
8.3-30	JC61-70932A	SPRING ETC-GUIDE DEVE;ML-5000A,-,D4.3,-,		SA
8.3-31	JC72-00976A	PMO-ACTUATOR FEED;ML-1710,PC NH-1023P,BL	F6156	SA
8.3-33	JC70-00309A	IPR-P-GROUND_EARTH TR;ML-1710,SUS304-CSP		SNA
8.3-34	JC72-00975A	PMO-ACTUATOR EMPTY;ML-1710,PC(NH-1023P),	K3816	SA
8.3-37	6107-001162	SPRING-ETC;SUS304-WPB,-,PI0.45,D4.45,L12		SA
8.3-38	JC72-00382B	PMO-BUSHING FEED;ML-1710,POM(DERLIN 8903	P0034	SA
8.3-39	JC66-00526A	ROLLER-FEED ROLLER 1;ML-1510,SUM24L+NI+E	F6201	SA
8.3-40	JC66-00598A	ROLLER-FEED;ML-1710,SUM24L+NI+EPDN,5/12.	F6200	SA
8.3-40-1	JC61-00586A	BUSH-M-PICK_UP L;ML-1710,POM(DELIN 8903)	P2039	SA
8.3-41-2	JC66-00399A	SHAFT-P-PICK_UP;ML-1710,SECC,-,-,-,-,0.8	P2160	SA
8.3-41-3	JC61-00593A	STOPPER-PICK_UP;ML-1710,POM(DELIN 8903),		SNA
8.3-41-4	JC72-00982A	PMO-IDLE PICK_UP;ML-1710,POM(M90-44),NTR	P2131	SA
8.3-41-5	JC72-01231A	SPONGE-ROLLER PICK_UP;ML-1510,EPDM+IR,-,	P2164	SA
8.3-41-6	JC61-00587A	BUSH-M-PICK_UP R;ML-1710,POM(M90-44),-,-	P2067	SA
8.3-41-7	JC61-00591A	HOUSING-M-PICK_UP;ML-1710,PC+ABS,-,-,L43	P2040	SA
8.3-42	JC66-00396A	GEAR-IDLE 23;ML-1710,POM(M90-44),0.8,23,	G0256	SA
8.3-43	JC66-00398A	SHAFT-FEED;ML-1710,POM(M90-44),-,-,NTR,-	F6210	SA
8.3-44	JC66-00394A	GEAR-FEED 2;ML-1710,POM(M90-44),-,-,-,NT	F6072	SA
8.3-45-1	JC72-00980A	PMO-GEAR PICK_UP B;ML-1710,POM(M90-44),N	P2126	SA
8.3-45-2	JC72-00979A	PMO-GEAR PICK_UP A;ML-1710,POM(M90-44),N	P6221	SA
8.3-45-3	6107-001167	SPRING-CS;SUS304-WPB,-,PI0.25,D3.25,L9.6	D4089	SA
8.3-46-1	JC66-00393A	GEAR-FEED 1;ML-1710,POM(DELIN 8903),-,-,	F6071	SA
8.3-46-2	JC72-00978A	PMO-COLLAR_SPRING;ML-1710,POM(M90-44),NT	Z4125	SA
8.3-46-3	6107-001171	SPRING-TS;SWRS82A,-,0.75X0.5,D14.2,-,-,-		SA
8.3-46-4	JC72-00981A	PMO-HUB CLUTCH;ML-1710,POM(M90-44),NTR,-		SNA
8.3-47	JC61-00602A	BRACKET-P-FEED;ML-1710,SECC,1,-,-,-,-	F6040	SA
8.3-48	JC33-00009A	SOLENOID-HB (PICK-UP);-,ML-1510,DC24V,-,	P2162	SA
8.3-49	JC33-00010A	SOLENOID-HB (MANUAL);-,ML-1510,DC24V,-,-	S8015	SA
8.3-50	JC66-00377A	CAM-M-PICK_UP;ML-1710,POM(DELIN 8903),-,	P2042	SA
8.3-51	6107-001170	SPRING-TS;SWP-B,-,PI0.9,D6.0,-,-,-,ID5.2		SA
8.3-52	6044-000001	RING-CS;ID3,OD3,T0.25,BLACK,SUS304	D4088	SNA
8.3-53	JC70-00308A	IPR-P-GROUND_DRIVE;ML-1710,SUS304-CSP,-,	F4106	SNA
8.3-54	JC70-00335A	IPR-P_GROUND_DRIVE2;ML-1710,SUS304-CSP,-	D4060	SA
8.3-55	JC70-00310A	IPR-P-GROUND_FUSER;ML-1710,SUS304-CSP,-,	F4105	SNA
8.3-56	JC61-00585A	BUSH-M-FEED IDLE;ML-1710,POM(CF620-GF20%	F6043	SA
8.3-57	JC61-70958A	SPRING ETC-TR;ML-5000A,SUS304 WPB,PI0.55		SA
8.3-58	JC66-00527A	SHAFT-FEED IDLE;ML-1510,SUM24L+NI,223,8,	F6209	SA
8.3-59	JC61-00718A	GUIDE-P-PAPER;ML-1710,SECC,0.8,19.5,261.	G2086	SA
8.3-60	JC70-00458A	IPR-P-GROUND_GUIDE PAPER;ML-1710,C5210P,	G2285	SNA
8.3-61	JC70-00307A	IPR-P-EARTH TRANSFER;ML-1710,SECC,-,1.0T	K3367	SA

SA : SERVICE AVAILABLE **SNA** : SERVICE not AVAILABLE

Draw#	Part Code	Description	Location	SNA
8.3-62	JC67-00027A	LENS-PTL;ML-1710,PMMA,NTR,-,-,-,-	K3433	SA
8.3-63	JC61-00583A	HOLDER-PTL;ML-1710,PC,-,-,-,BLK,V0	H4041	SA
8.3-64	JC92-01620B	PBA SUB-PTL;SCX-4100,SEC,-,PTL,-,-,-,132	M0248	SA
8.3-65	JC61-00588A	BUSH-M-TR L;ML-1710,POM(M90-44),-,-,-,BL	K2886	SA
8.3-66	JC61-00047A	SPRING ETC-TR L HAWK;ML-6060A,SWP-B,-,-,	S0033	SA
8.3-67	JC72-00102A	PMO-BUSHING_TR(L);SF-5100,POM (CH-15),BL	K3856	SA
8.3-69	JC96-03808A	ELA HOU-FUSER;SCX-4200,SAMSUNG,-,110V,-,		SA
8.4-1	JC63-01019A	COVER-M-FUSER;SCX-4200,PET+GF30%,T2.0,28		SA
8.4-2	JC61-00584A	HOLDER-M-PLATE CLAW;ML-1710,PPS+GF40%,-,	H4031	SA
8.4-3	JC61-00064A	SPRING ETC-CLAW;ML-5200A,SUS 304 WPB,¥Ō0	B2031	SA
8.4-4	JC72-40361A	PMO-ROLLER_EXIT;SCF(XR),POM,NATURAL,-,M9	R0015	SNA
8.4-5	JC61-70976A	SPRING ETC-FUSER EXIT;ML-7000,SUS304-WPB	S0021	SNA
8.4-6	JC47-00013A	THERMOSTAT-_170;SCX-4200,-,125V/250V,15A		SA
8.4-10	JC66-01204A	GEAR-RDCN 25/15;SCX-4200,PA6T,FR52G30LX,		SA
8.4-11	JC39-00404A	CBF HARNESS-FUSER JOINT;ML-1610,WIRE HAR	H1089	SA
8.4-12	JC39-00558A	HARNESS-FUSER;SCX-4200,UL3122 #18,UL 312		SA
8.4-13	1404-001298	THERMISTOR-NTC;7KOHM,-,3370K,0.3MW/C,-,-	W3071	SA
8.4-14	4713-001203	LAMP-HALOGEN;115V,-,600W,-,-,-,6X284MM		SA
8.4-15	JC66-00601A	ROLLER-HEAT;ML-1710,AL 5052+PFA,20.3,247	H2010	SA
8.4-16	JC66-00564A	GEAR-FUSER, Z37;ML-1710,PPS OFL4036,0.8,	F4094	SA
8.4-17	JC61-00590A	BUSH-M-HR R;ML-1710,PPS RBA313N,-,-,-,-,	K2880	SA
8.4-18	JC61-00589A	BUSH-M-HR L;ML-1710,PPS(RBA313N),-,-,-,-	K2879	SA
8.4-19	JC66-00380A	ROLLER-M-EXIT F/UP;ML-1710,PC(GE EXL-911	E0041	SA
8.4-20	JC73-00017A	RMO-RUBBER_EXIT;SF-5100,EPDM,14.4*9.8,50	K4215	SA
8.4-21	JC66-00600A	ROLLER-PRESSURE;ML-1710,SUM24L+LSR+PFA,2	P6014	SA
8.4-22	JC66-10901A	BEARING-PRESSURE/R;ML-165,PPS(RBA313N),-	P6004	SA
8.4-23	6107-001168	SPRING-CS;PW-2,-,PI0.95,D5.95,L16,-,-,ID	D4085	SA
8.4-24	JC72-00382A	PMO-BUSHING TX;ML-6060A,POM M9044,BLK,-,		SNA
8.4-25	JC61-00581A	HOLDER-ACTUATOR;ML-1710,PBT GP2150+GF 15		SNA
8.4-27	JC72-00987A	PMO-ACTUATOR_EXIT;ML-1710,PC+GF20%,BLK,-	E4093	SA
8.4-28	JC70-00317A	IPR-P-FRAME_FUSER;ML-1710,SECC,-,1.2,356		SNA
8.4-29	JC61-00595A	GUIDE-M-INPUT;ML-1710,PET+GF30%,-,-,-,BL	K3960	SNA
8.4-30	JC68-01581A	LABEL(P)-CAUTION HOT;COMMON,SAMSUNG,PET,	L0001	SNA
8.4-31	6006-001078	SCREW-TAPTITE;WSP,PH,+,M3,L10,ZPC(YEL),S		SNA
8.4-31	6003-000261	SCREW-TAPTITE;BH,+,B,M3,L6,ZPC(YEL),SWRC		SNA
8.4-31	6003-000264	SCREW-TAPTITE;PWH,+,B,M3,L6,ZPC(YEL),SWR		SNA
8.4-31	6003-000282	SCREW-TAPTITE;BH,+,-,B,M3,L8,ZPC(BLK),SW		SA
8.4-31	6003-000301	SCREW-TAPTITE;BH,+,S,M4,L6,ZPC(YEL),SWRC		SNA
8.4-31	6003-000269	SCREW-TAPTITE;BH,+,-,S,M3,L6,ZPC(YEL),SW		SA
8.5-1	JC61-00598B	BRACKET-P-GEAR 1400;SCX-4200,SECC+SUM24L		SA
8.5-2	JC66-01202A	GEAR-DRV FUSER IN;SCX-4200,PA6T,0.8,26,-		SA
8.5-3	JC66-00340A	GEAR-HUB CLUTCH;SCX-5100,POM,M0.8,Z13,-,	C9033	SA
8.5-4	JC66-01203A	GEAR-DRV FUSER OUT;SCX-4200,POM,0.8,53,-		SA
8.5-5	6031-000023	WASHER-PLAIN;-,ID5.9,OD10.0,T0.5,BLK,POL	W0001	SNA
8.5-6	JC66-00391A	GEAR-RDCN 113/33;ML-1400,POM(DELIN 8903)	G0381	SA
8.5-7	JC66-00389A	GEAR-RDCN 57/18;ML-1710,POM(M90-44),-,57	G0394	SA
8.5-8	JC61-00599A	BRACKET-P-MOTOR 1400;ML-1710,SECC,1.2,61	B4025	SNA
8.5-9	JC66-00392A	GEAR-RDCN 90/31;ML-1710,POM(NW02),-,90/3	G0380	SA
8.5-10	JC66-00390A	GEAR-RDCN 103/41;ML-1710,POM(NW-02),-,10	G0396	SA
8.5-11	JC31-00028A	MOTOR STEP-HUMMINGBIRD;M49SP-2NK,ML-1710	M2159	SA
8.5-12	JC72-00825A	PMO-IMPELLER_DRV;ML-6200,NYLON66,BLK,-,-	K4023	SNA
8.5-13	6001-000130	SCREW-MACHINE;BH,+,M3,L6,ZPC(WHT),SWRCH1	-	SA
8.6-1	JC63-01013A	COVER-M-PLATEN;SCX-4200,HIPS,T2.2,405.29		SA
8.6-2	JC63-00209A	SHEET-WHITE SPONGE;SCX-4216F,PC SHEET+SP		SA
8.6-3	JC61-00929A	HINGE-M_PIVOT;SCX-4100,POM,3.0,-,-,-,-,-		SNA
8.6-4	JC96-03833A	ELA UNIT-SCAN UPPER;SCX-4200,SEC,-,-,-,-		SA
8.6-5	JB68-00644A	LABEL(P)-SHADING;COMMON,YOOPO PAPER ,T0.		SA
8.6-6	JB01-00002A	GLASS-PLATEN;247*356,2.85,CLEAR		SA
8.6-7	JC96-03806A	ELA UNIT-SCAN LOWER;SCX-4200,SEC,-,-,-,-		SA
8.6-8	JC63-00459A	SHEET-SCAN LOWER;SCX-4100,PET,T0.188,-,-		SNA

SA : SERVICE AVAILABLE **SNA** : SERVICE not AVAILABLE

Draw#	Part Code	Description	Location	SNA
8.6-9	JC61-00931A	BRACKET-P-PULLEY;SCX-4100,SECC,0.8,-,-,-		SNA
8.6-A	JC96-03834A	ELA UNIT-SCAN DRIVE;SCX-4200,SAMSUNG,-,1		SA
8.6-10	JC66-00713A	PULLEY-M_IDLE;SCX-4100,POM,-,WHT,-,-,-,-		SNA
8.6-11	6107-001194	SPRING-CS;SWP-B,BLK,PI0.9,D6.95,L20,-,-,	S0032	SNA
8.6-12	JC31-00049A	MOTOR STEP-SCAN;2T357278Q,SCX-4200,0.2A,		SA
8.6-13	JC61-01640A	BRACKET MOTOR-P-SCAN;SCX-4200,SECC,T1.0,		SA
8.6-14	6602-001261	BELT-TIMING GEAR;C9000-40031,RUB,T0.98,-		SNA
8.6-15	JC66-01201A	GEAR-M_PULLEY;SCX-4200,POM,0.4,73,-,-,31		SA
8.6-16	JC66-00718A	SHAFT-CIS;SCX-4100,SUM22,-,6,-,-,-		SNA
8.6-17	JC61-01646A	BRACKET-M-CIS;SCX-4200,PC/ABS,2.0,28.67,		SA
8.6-18	6107-001137	SPRING-CS;SUS304 WPB,-,PI0.4,D9.4,L11.5,		SNA
8.6-20	JB61-00232A	CLIP-P-BELT;SF-457,SUS,0.2,NTR,HALF HARD		SA
8.6-21	JC39-00358A	CBF SIGNAL-CIS FFC;SCX-4100,12PIN,FFC,68		SA
8.6-22	0609-001237	CONTACT IMAGE SENSOR;216MM,5136DOT,1.5MS		SA
8.6-23	JC66-00904A	SLIDER-M_CIS R;SCX-4521F,POM,3,13.5,37.4		SNA
8.6-24	JC66-00840A	SLIDER-M_CIS L;SCX-4521F,POM,3,13.5,37.4		SNA
8.6-25	JC96-03809A	ELA UNIT-OPE;SCX-4200,SEC,-,-,-,-,-,-		SA
8.7-1	JC63-01010A	COVER-M-PANEL;SCX-4200,HIPS,T2.2,52.1,34		SA
8.7-2	JC64-00257A	KEY-M-MENU;SCX-4200,ABS,-,HB,DARKMAGENT,		SA
8.7-3	JC64-00255A	KEY-M-START;SCX-4200,HIPS,P.28,HB,SOFT B		SA
8.7-4	JC64-00256A	KEY-M-STOP;SCX-4200,HIPS,P22,HB,SOFT ORA		SA
8.7-5	JC64-00258A	KEY-M-COPIES;SCX-4200,HIPS,19,HB,DARKMAG		SA
8.7-6	JC67-00156A	CAP-M-LED;SCX-4200,PMMA,T1.0,14.6,14.1,M		SA
8.7-7	JC92-01760B	PBA SUB-PANEL;SCX-4200/XAA,SEC,AMERICA,-		SA
8.7-8	JC67-00155A	CAP-M-LCD;SCX-4200,PC,T2.0,41.0,86.2,CLE		SA
8.7-9	JC39-00582A	HARNESS-OPE;SCX-4200,WIRE HARNESS,UL1061		SA
8.7-10	6003-000196	SCREW-TAPTITE;PWH,+,B,M3,L10,NI PLT,SWRC		SA
8.8-1	JC70-00300A	ADJUST-M-CASSETTE_L;ML-1400,ABS,-,-,-,VI	K2014	SA
8.8-2	JC70-00301A	ADJUST-M-CASSETTE_R;ML-1400,ABS,-,-,-,VI	K2015	SA
8.8-3	JG66-40003A	GEAR-PINION;SF4000,POM,WHT,M1,Z16	G0035	SA
8.8-4	JC70-00314A	IPR-PLATE PAD;ML-1710,SUS304-CSP,-,0.1,-	P0009	SA
8.8-5	JC73-00140A	RPR-FRICTION PAD;ML-1510,NBB,1T 8.9*47,5	P0034	SA
8.8-6	JC63-00290A	SHEET-HOLDER PAD;ML-1750,PC,0.125T,50,18	H4102	SA
8.8-7	JC61-00580A	HOLDER-M-PAD;ML-1710,PC+ABS(NH-1023P),-,	P0034	SA
8.8-8	JG61-70531A	SPRING ETC-LOCKER,PLATE;SF6000,STS304WPB	S0025	SA
8.8-9	JC61-00603A	PLATE-P-KNOCK_UP;ML-1710,SECC,1,250.7,16		SNA
8.8-10	6107-001166	SPRING-CS;SUS304-WPB,-,PI0.65,D12.65,L59		SA
8.8-11	JC72-00971A	PMO-EXTENSION SMALL;ML-1710,ABS(HF-0660I	E5014	SA
8.8-12	JC61-00918B	GUIDE-M-EXTENSION L2;ML-2250,HIPS,-,184.	E5013	SA
8.8-13	JC61-00876A	FRAME-M_CASSETTE;SF-755P,HIPS,HR-1360,HB		SNA
Replacement	JC69-00932A	BOX(P)-MAIN;SCX-4200/XAA,DW,OFFSET4,321,		SA
#N/A	JC68-00761A	MANUAL-PRC;COMMON,SEA,ENGLISH,USA,MOJO 1		SNA
#N/A	JC68-01653A	MANUAL-QIG;SCX-4200,SAMSUNG,ENGLISH,U.S.		SNA
#N/A	JC96-02663C	ELA ETC-SHIELD PCB;SCX-4200,SAMSUNG,-,-,		SNA
#N/A	JC96-03206A	ELA UNIT-SMPS V1		SNA
#N/A	JC96-03826A	ELA HOU-ENGINE;SCX-4200,SEC,-,-,-,-,-		SNA
#N/A	JC99-01937A	PAA-PACKING;SCX-4200/XAA,US,-,-,-,-		SNA
#N/A	JC99-01939A	PAA WOOD-LABEL;SCX-4200/XAA,US,-,-,-,-		SNA
#N/A	JC99-01946A	INA-ACCESSORY;SCX-4200/XAA,SAMSUNG,-,EIG		SNA
#N/A	0202-001240	SOLDER-WIRE;HSE-01,-,D3,SN/0.5CU/0.03NI/		SNA
#N/A	0202-001492	SOLDER-WIRE FLUX;HSE-02 LFM48 SR-34 S,-,		SNA
#N/A	0203-001100	TAPE-OPP MASKING;OPP/W75/CLR,T0.05,W75,L		SNA
#N/A	0203-001159	TAPE-FILAMENT;#8915,T0.15,W12,L55000,CLR		SNA
#N/A	0204-000469	THINNER;#4662,-,0.795,-		SNA
#N/A	0204-002978	FLUX;KSP-70L,-,84%,FLUX,SPRAY		SNA
#N/A	0205-001003	GREASE-BEARING;NYOGEL788,DAMPING GREASE,		SNA
#N/A	0205-001080	GREASE-BEARING;NYOGEL 774H,NOISE DAMPING		SNA
#N/A	0402-000129	DIODE-RECTIFIER;1N4003,200V,1A,DO-41,TP		SA
#N/A	0403-001440	DIODE-ZENER;1N5956BRL/BZY97-C200,188-212		SNA
#N/A	1203-000242	IC-POSI.FIXED REG.;7812,TO-220,3P,-,PLAS		SA

SA : SERVICE AVAILABLE **SNA** : SERVICE not AVAILABLE

Draw#	Part Code	Description	Location	SNA
#N/A	2001-000911	R-CARBON;62OHM,5%,1/4W,AA,TP,2.4X6.4MM		SA
#N/A	2005-000168	R-WIRE WOUND,NON;0.22ohm,5%,2W,AA,BK,4x1		SA
#N/A	2401-002300	C-AL;47uF,20%,50V,GP,TP,6.3x11,5		SA
#N/A	2801-001375	CRYSTAL-UNIT;10MHz,20ppm,28-AAA,16pF,45o		SNA
#N/A	2801-003267	CRYSTAL-UNIT;16.5912MHz,50ppm,28-AAA,20p		SNA
#N/A	2801-003886	CRYSTAL-UNIT;12MHz,50ppm,28-AAA,16pF,50o		SNA
#N/A	3301-001742	CORE-FERRITE;AD,32X35X7.75MM ,-,-		SNA
#N/A	3708-001408	CONNECTOR-FPC/FFC/PIC;12P,1MM,STRAIGHT,S		SA
#N/A	3711-002003	HEADER-BOARD TO CABLE;BOX,26P,2R,2mm,STR		SNA
#N/A	3711-002812	HEADER-BOARD TO CABLE;BOX,11P,1R,2mm,STR		SNA
#N/A	3711-003408	HEADER-BOARD TO CABLE;BOX,2P,1R,2mm,STRA		SNA
#N/A	3711-003409	HEADER-BOARD TO CABLE;BOX,3P,1R,2mm,STRA		SNA
#N/A	3711-003410	HEADER-BOARD TO CABLE;BOX,4P,1R,2mm,STRA		SNA
#N/A	3711-003968	HEADER-BOARD TO CABLE;BOX,3P,1R,2.5mm,ST		SA
#N/A	3711-003969	HEADER-BOARD TO CABLE;BOX,2P,1R,2.5mm,ST		SNA
#N/A	3722-002303	JACK-USB;4P/1C,AU30U,BLK,ANGLE,B TYPE		SA
#N/A	6107-001047	SPRING-ES;PI0.45,D2.75,L24.2,-,SUS304		SA
#N/A	6501-001020	CABLE TIE;DA-B190,T1.3,W8.7,L195,NTR,NYL		SNA
#N/A	6902-000288	BAG PE;LDPE,T0.05,W250,L450,TRP,8,2-		SNA
#N/A	6902-000312	BAG PE;HDPE,T0.015,W1000,L900,TRP,8,4-		SNA
#N/A	JB68-00073A	LABEL(R)-BAR CODE;SF-3000,PY,38X6.5,T0.1		SNA
#N/A	JB68-00916A	LABEL RATING-BLANK;SF-340,SEC,TETRON,0.0		SNA
#N/A	JC02-00043A	TONER-GRINDED;ML-1610,TUFTONE YS-4,-,8.8		SNA
#N/A	JC44-00072A	SMPS-V1;SCX-4100,-,AC/DC,45.7W,100-120VA	S7050	SA
#N/A	JC46-00274A	S/W APPLICATION-CD;-,SCX-4200,DRV,1.0,20		SNA
#N/A	JC61-00607A	GUIDE-P-TR;ML-1710,SECC,0.5,239.1,76.4,-	G2089	SA
#N/A	JC61-01641A	GUIDE-M-HANDLE;SCX-4200,HIPS, HB,T2.2,28		SA
#N/A	JC61-01649A	FRAME-M DEVE UPPER;SCX-4200,HIPS,-,HB,BL		SNA
#N/A	JC61-70911A	SPRING ETC-EXIT ROLL FD;ML-165,SUS304 WP	S0021	SA
#N/A	JC63-00458A	GROUND-P-TERMINAL DEVE;SCX-4920N,STS304		SA
#N/A	JC63-00551A	FELT-CHARGE ROLLER;ML-2250,POLYESTER+POL		SNA
#N/A	JC66-00529A	ROLLER-M-IDLE FEED;ML-1510,POM(DELRIN890	F6203	SA
#N/A	JC66-00671A	DAMPER-SOLENOID;ML-1750,NBR,-,3.2,20.3,2		SNA
#N/A	JC66-00719A	CAM-M-KNOCK UP;ML-1750,POM(KOLON K700),-		SNA
#N/A	JC66-00720A	SHAFT-P-CORE;ML-1750,SECC 1.2T,203,-,-,-	P2158	SA
#N/A	JC67-00158A	CAP-M-LSU;SCX-4200,HIPS,1.5T,-,-,-,-		SNA
#N/A	JC68-00317A	LABEL(R)-HOT CAUTION,KME;ML-7050,TETRON,		SNA
#N/A	JC68-00573A	LABEL(R)-BARCODE;ML-4500,PET,T0.05,10mm,		SNA
#N/A	JC68-00690A	MANUAL-(CARD)WARRANTY CARD;ML-1210,XEU,E		SNA
#N/A	JC68-00761B	MANUAL-REGISTRATION CARD;COMMON,XAC,FREN		SNA
#N/A	JC68-00761C	MANUAL-WARRANTY CARD;COMMON,XAC,FRENCH,C		SNA
#N/A	JC68-00761D	MANUAL-REGISTRATION;COMMON,XAA,FRENCH,CA		SNA
#N/A	JC68-01584A	LABEL(P)-BLANK 90*25;CLP-510,SEE,ART 100		SA
#N/A	JC68-01666A	LABEL(R)-POP;SCX-4200/XAA,US,YUPO REMOVA		SNA
#N/A	JC68-10932A	LABEL(P)-BLANK(ML);ML-85,ART,70X60,G100,		SNA
#N/A	JC68-30587A	LABEL(R)-CUSTOMER;COMMON,PE,-,T0.075,-,,		SNA
#N/A	JC69-00933A	CUSHION-MAIN(R);SCX-4200/XAA,EPS,-,506,1		SNA
#N/A	JC69-00933B	CUSHION-MAIN(L);SCX-4200/XAA,EPS,-,506,1		SNA
#N/A	JC72-00972A	PMO-PLATE_LOCKER;ML-1710,POM(M90-44),WHT	L6051	SA
#N/A	JC73-00141A	RPR-PAD CASSETTE;ML-1510,URETHANE SPONGE	R0020	SA
#N/A	JC92-01477A	PBA MAIN-DEV;ML-2150,SEC,KOREA,DEV B'D,-		SNA
#N/A	JC94-01097A	PHANTOM AU JC92-01762A		SNA
#N/A	JC96-03805A	ELA UNIT-COVER PLATEN;SCX-4200,SEC,-,-,-		SA
#N/A	JC97-01788A	MEA UNIT-CLUTCH;ML-1710,SAMSUNG,-,-,-,-	C9040	SA
#N/A	JC97-02430A	MEA-DEVE KIT;SCX-4200,SEC,-,-,-,-,-		SNA
#N/A	0201-001162	ADHESIVE-CYA;LOCTITE403,NTR,1250,20G		SNA
#N/A	0201-001183	ADHESIVE-AA;ARON ALPHA #202F,NTR,100,20G		SNA
#N/A	0202-001459	SOLDER-CREAM;S3X58-M405,-,D20~38§-,96.5SS		SNA
#N/A	0203-001189	TAPE-ACETATE;#810,T0.05,W12,L65000,TRP,-		SNA
#N/A	0203-001266	TAPE-DOUBLE FACE;3M9448HK,T0.16,W4,L280,		SNA

SA : SERVICE AVAILABLE **SNA** : SERVICE not AVAILABLE

Draw#	Part Code	Description	Location	SNA
#N/A	0203-001267	TAPE-DOUBLE FACE;3M9448HK,T0.16,W8,L280,		SNA
#N/A	0205-000005	GREASE-BEARING;EP56,DIAMOND HYDRO FLUID,		SNA
#N/A	0205-001056	GREASE-GRAPHITE;CRS841,WHT,-		SNA
#N/A	0205-001059	GREASE-BEARING;PETAMO GHV 133,BEIGE,15KG		SNA
#N/A	0205-001067	GREASE-GRAPHITE;NYOGEL 756G,HYDRO CARBON		SNA
#N/A	0205-001088	GREASE-BEARING;NICHIMOLY DM-1770X,PTFE,-		SNA
#N/A	0401-000005	DIODE-SWITCHING;1N4148,75V,150mA,DO-35,T		SA
#N/A	0401-000116	DIODE-SWITCHING;MMSD914T1,100V,200MA,SOD		SNA
#N/A	0401-001090	DIODE-SWITCHING;1SS355,80V,100MA,SOD-323		SA
#N/A	0404-000112	DIODE-SCHOTTKY;RB420D,40V,100MA,SOT-23,T		SA
#N/A	0407-000122	DIODE-ARRAY;KDS226,80V,300mA,C2-3,SOT-23		SA
#N/A	0501-000150	TR-SMALL SIGNAL;2SA1037,PNP,200mW,SOT-23		SA
#N/A	0501-000457	TR-SMALL SIGNAL;MMBT2222A,NPN,350MW,SOT-		SA
#N/A	0504-000111	TR-DIGITAL;DTC114YK,NPN,200MW,10K/47K,SO		SA
#N/A	0601-001908	LED;ROUND,RED,3MM,630NM,3.2X4.6MM		SNA
#N/A	0801-000794	IC-CMOS LOGIC;7S08,AND GATE,SOT-25,5,63M		SA
#N/A	0801-002446	IC-CMOS LOGIC;74LCX14,SCHMITT INVERTER,T		SNA
#N/A	0904-001989	IC-USC;ISP1582BS,-,HVQFN56,56P,8X8X0.85M		SA
#N/A	1003-001535	IC-MOTOR DRIVER;A3977SLP,TSSOP,28P,9.6X4		SA
#N/A	1105-001390	IC-DRAM;K4S641632,1MX16X4BIT,TSOP(II),54		SA
#N/A	1107-001302	IC-FLASH MEMORY;29LV800,1Mx8/512Kx16,TSO		SA
#N/A	1202-000164	IC-VOLTAGE COMP.;393,SOP,8P,150MIL,DUAL,		SA
#N/A	1203-001455	IC-POSI.FIXED REG.;1117,DPAK,3P,265MIL,P		SA
#N/A	1203-002233	IC-RESET;XC61F,SOT-23,3P,-,PLASTIC,0.7/1		SNA
#N/A	1203-002454	IC-POSI.FIXED REG.;FAN1117A,TO-252,3P,25		SA
#N/A	1205-002258	IC-CLOCK GENERATOR;CY25814SC,SOIC,8P,150		SNA
#N/A	1205-002339	IC-CLOCK GENERATOR;CY25811SC,SOIC,8P,150		SA
#N/A	2007-000070	R-CHIP;0ohm,5%,1/10W,TP,1608		SA
#N/A	2007-000071	R-CHIP;22ohm,5%,1/10W,TP,1608		SA
#N/A	2007-000084	R-CHIP;4.7Kohm,5%,1/10W,TP,1608		SA
#N/A	2007-000091	R-CHIP;12Kohm,5%,1/10W,TP,1608		SA
#N/A	2007-000096	R-CHIP;30Kohm,5%,1/10W,TP,1608		SA
#N/A	2007-000097	R-CHIP;47Kohm,5%,1/10W,TP,1608		SA
#N/A	2007-000105	R-CHIP;200Kohm,5%,1/10W,TP,1608		SA
#N/A	2007-000107	R-CHIP;470Kohm,5%,1/10W,TP,1608		SA
#N/A	2007-000113	R-CHIP;33ohm,5%,1/10W,TP,1608		SA
#N/A	2007-000123	R-CHIP;1.5Kohm,5%,1/10W,TP,1608		SA
#N/A	2007-000134	R-CHIP;33Kohm,5%,1/10W,TP,1608		SA
#N/A	2007-000293	R-CHIP;100ohm,5%,1/4W,TP,3216		SA
#N/A	2007-000303	R-CHIP;10Kohm,5%,1/4W,TP,3216		SA
#N/A	2007-000475	R-CHIP;1Mohm,1%,1/10W,TP,1608		SA
#N/A	2007-000729	R-CHIP;300ohm,5%,1/10W,TP,1608		SA
#N/A	2007-000730	R-CHIP;300ohm,5%,1/4W,TP,3216		SA
#N/A	2007-000965	R-CHIP;5.1Kohm,5%,1/10W,TP,1608		SA
#N/A	2007-001002	R-CHIP;510ohm,5%,1/10W,TP,1608		SA
#N/A	2007-001045	R-CHIP;56ohm,5%,1/4W,TP,3216		SNA
#N/A	2007-001139	R-CHIP;7.5Kohm,1%,1/10W,TP,1608		SA
#N/A	2007-002901	R-CHIP;12.1Kohm,1%,1/10W,TP,1608		SA
#N/A	2007-007521	R-CHIP;14.7Kohm,1%,1/10W,TP,1608		SA
#N/A	2007-008567	R-CHIP;15.4KOHM,1%,1/10W,TP,1608		SNA
#N/A	2011-001011	R-NET;10Kohm,5%,1/16W,L,CHIP,8P,TP,3.2x1		SNA
#N/A	2203-000206	C-CER,CHIP;100nF,10%,50V,X7R,2012		SA
#N/A	2203-000257	C-CER,CHIP;10nF,10%,50V,X7R,1608		SA
#N/A	2203-000384	C-CER,CHIP;0.015nF,5%,50V,C0G,1608		SA
#N/A	2203-000426	C-CER,CHIP;0.018nF,5%,50V,C0G,1608		SA
#N/A	2203-000440	C-CER,CHIP;1nF,10%,50V,X7R,1608		SA
#N/A	2203-000783	C-CER,CHIP;0.33nF,5%,50V,C0G,1608		SA
#N/A	2203-001607	C-CER,CHIP;0.22nF,5%,50V,NP0,1608		SA
#N/A	2203-001683	C-CER,CHIP;0.068nF,5%,50V,NP0,1608		SA
#N/A	2203-002392	C-CER,CHIP;220nF,+80-20%,50V,Y5V,2012		SA

SA : SERVICE AVAILABLE **SNA** : SERVICE not AVAILABLE

Draw#	Part Code	Description	Location	SNA
#N/A	2203-002398	C-CER,CHIP;22nF,10%,50V,X7R,1608		SA
#N/A	2203-005249	C-CER,CHIP;100nF,10%,50V,X7R,1608		SNA
#N/A	2401-000426	C-AL;10uF,20%,16V,GP,TP,3.5x5,5		SA
#N/A	2402-000008	C-AL,SMD;47uF,20%,16V,GP,TP,6.6x6.6x5.4		SA
#N/A	2402-001178	C-AL,SMD;10uF,20%,16V,WT,TP,4.3x4.3x5.8m		SA
#N/A	3301-000317	BEAD-SMD;120ohm,2012,TP,-,-		SNA
#N/A	3301-000325	BEAD-SMD;60ohm,3.2x2.5x1.3mm,400mA,TP,,,		SNA
#N/A	3301-001084	BEAD-SMD;600ohm,2012,300mA,TP,522ohm/70M		SNA
#N/A	JC13-00021A	IC ASIC-CHORUS2;S3C46Q0X,SF-531P,208P,+1		SA
#N/A	JC39-00243A	CBF HARNESS-PTL;ML-1710,CBF,UL 1061,2P,2	H1212	SA
#N/A	JC39-00576A	CBF HARNESS-CRUM2;SCX-4200,CBF,UL1061,5P		SA
#N/A	JC41-00179A	PCB-DEV B'D;ML-2150,FR-1,1LAYER,-,1.6T,5		SNA
#N/A	JC41-00246A	PCB-SUB (1LAYER);SCX-4920N,FR-1,1,-,1.6T		SNA
#N/A	JC41-00323A	PCB-MAIN;SCX-4200,FR4,2 L,-,1.6T,185MM *		SNA
#N/A	JC61-00025A	SPRING ETC-CS-CHARGE APOLLO;SF-5100,SUS	B2030	SNA
#N/A	JC61-00035A	SPRING ETC-HV APOLLO;SF-5100,SUS304WPB,0		SNA
#N/A	JC61-00063A	SUPPORT-SEAL;ML-7000,POLYURETHANE FOAM,T		SNA
#N/A	JC61-00605A	PLATE-P-CLAW;ML-1710,SUS304-CSP,0.1,-,-	H4032	SNA
#N/A	JC61-00610B	PLATE-M_DEV_SD;ML-1710D3,PC ,2,-,-,BLACK		SNA
#N/A	JC61-01648A	FRAME-M DEVE LOWER;SCX-4200,ABS,-,HB,BLK		SNA
#N/A	JC61-01650A	PLATE-M_DEVE R;SCX-4200,ABS,2,96.7,41.8,		SNA
#N/A	JC62-00083A	SEAL-SUPPLY L;ML-1510,PORON,-,T5.0,47.2,		SNA
#N/A	JC62-00084A	SEAL-SUPPLY R;ML-1510,PORON,-,T5.0,47.2,		SNA
#N/A	JC62-00085A	SEAL-SIDE;ML-1510,URETHAN FORM ,-,T2.8,1		SNA
#N/A	JC62-00086A	SEAL-SIDE CAP;ML-1510,EPDM,-,-,-,-,HARDN		SNA
#N/A	JC62-00090A	SEAL-FRAME LOWER;ML-1710,URETHAN FORM ,-		SNA
#N/A	JC63-01007A	COVER-M-SCAN UPPER;SCX-4200,HIPS,T2.2,40		SA
#N/A	JC63-01014A	COVER-M-SCAN LOWER;SCX-4200,HIPS,T2.2,40		SA
#N/A	JC66-00381A	GEAR-AGITATOR;ML-1710,POM,0.6,22,-,-,-,-	G0164	SA
#N/A	JC66-00382A	GEAR-IDLE 26/13;ML-1710,POM,0.6,26/13,-,	G0260	SA
#N/A	JC66-00384A	GEAR-DEVE ROLLER;ML-1710,CARILON,0.8,-,-	G0561	SA
#N/A	JC66-00386A	GEAR-OPC L;ML-1710,PC(LS-1250),0.8,30,-,	G0355	SA
#N/A	JC66-00697A	GEAR-IDLE 17/20;SCX-4920N,POM,0.8/0.6,17		SNA
#N/A	JC66-00698A	GEAR-SUPPLY ROLLER;SCX-4920N,500CL,0.6,2		SNA
#N/A	JC66-00722B	ROLLER-SUPPLY;SCX-4200,SILICON FOAM,¥Õ11S		SNA
#N/A	JC66-00723A	DRUM-OPC;SCX-4100,ALUMINIUM,-,¥Õ24.01,23S		SNA
#N/A	JC66-01229A	ROLLER-DEVELOPER;SCX-4200,CONDUCTIVE NBR		SNA
#N/A	JC67-00028A	CAP-M-DEV L;ML-1710,ABS,2,-,-,-,19*24.7*		SNA
#N/A	JC67-00029A	CAP-M-DEV R;ML-1710,ABS,2,-,-,-,19*24.7*		SNA
#N/A	JC67-00069A	CAP-M-PULLEY;SCX-4100,POM,T1,¥Õ14,4.3,NTS		SNA
#N/A	JC68-00408A	LABEL(R)-LV FUSER;COMMON,PVC,-,110V,-,,,		SNA
#N/A	JC68-01040A	MANUAL-CARD PROTECTION;ML-1710,SEC,-,-,-		SNA
#N/A	JC68-01085K	LABEL(P)-EXTRACT;SCX-4200/XAA,SAMSUNG,AR		SNA
#N/A	JC68-10914D	LABEL(P)-SERIAL NO;ML-85,ART,70X15,G100,		SNA
#N/A	JC69-00078A	BAG PE;CONDUTIVE T0.1,T=0.1,-,190*410,-,		SNA
#N/A	JC70-00050A	IPR-TERMINAL;SF-5100,SWRCH1018,-,-,-,-,8		SNA
#N/A	JC70-00153A	IPR-ELECTRODE CHARGE;ML-4500,SUS301,-,8.		SNA
#N/A	JC70-00483A	ELECTRODE-P_SR(M);SCX-4100,SUS301-CSP T0		SNA
#N/A	JC70-40910A	ICT-SHAFT GEAR;ML-5000,SUM24L,¡Ë4,-,-,-,S		SNA
#N/A	JC70-50901A	IPR-IPM BUSHING DEV R;ML-5000,BRONZE,-,D		SNA
#N/A	JC71-00033A	NPR-GND LUG;-,ML-1650,BS-SN,0.5T,-,-,-,-		SNA
#N/A	JC72-00082A	PMO-BUSHING AGI R;SF-5100,POM,BLK,-,-,-,		SNA
#N/A	JC72-00083A	PMO-HOLDER CR;SF-5100,POM,BLK,-,-,-,-,-,		SNA
#N/A	JC72-00288A	PPR-SPACER DR;SF-5100,PET FILM, T0.1,-,-		SNA
#N/A	JC72-00288B	PPR-SPACER DR R;SF-5100,TEFRON,WHT,-,-,T		SNA
#N/A	JC72-00289B	PPR-FILM REAR;ML-1210,PET FILM,-,0.08T,-		SNA
#N/A	JC72-01234A	PMO-DEVE CAP TONER;CLP-500,PP,BLACK,-,H5		SNA
#N/A	JC72-40332A	PMO-BUSHING_CHARGE;ML-80,POM,BLK,HB,-		SNA
#N/A	JC72-41105A	PMO-BUSHING DEV;ML-5000,POM,NTR,-,-,-,-,		SNA
#N/A	JC73-00021A	RPR-SEAL BLADE;SF-5100,URETHANE FOAM,230		SNA

SA : SERVICE AVAILABLE **SNA** : SERVICE not AVAILABLE

Draw#	Part Code	Description	Location	SNA
#N/A	JC73-00055A	RPR-SEAL SPACE;SF-5100,URETHANE SPONGE ,		SNA
#N/A	JC73-10017A	RPR-SEAL_BLOCK;ML-80,POLYURETHANE FOAM,T		SNA
#N/A	JC73-10914A	RPR-SEAL FILM;ML-5000,URETHANE FOAM,11X1		SNA
#N/A	JC75-00043A	MEC-GEAR OPC R;SF-5100,SEC,-,-,BLK,-,-,-		SNA
#N/A	JC75-00044A	MEC-BUSHING AGI L;SF-5100,SEC,POM+SANTOP		SNA
#N/A	JC94-00467A	PHANTOM AU JC92-01477A		SNA
#N/A	JC94-00738A	PHANTOM AU JC92-01620B		SNA
#N/A	JC97-01782A	MEA-CHARGE ROLLER;ML-1710,SEC,12*254,0.5		SA
#N/A	JC97-01783A	MEA-SUS BLADE;ML-1710,SEC,242,SUS+BRACKE		SNA
#N/A	JC97-01900B	MEA UNIT-AGITATOR_B;ML-1610,SEC,SKYLARK,		SNA
#N/A	0407-000101	DIODE-ARRAY;DA204K,20V,100mA,C2-3,SOT-23		SA
#N/A	0601-000003	LED;ROUND,RED/GRN,3.1MM,650/563NM,3.8X5.		SA
#N/A	1103-001183	IC-EEPROM;24C04,512x8,SOP,8P,5x4mm,2.5/5		SA
#N/A	2203-000815	C-CER,CHIP;0.033nF,5%,50V,C0G,1608		SA
#N/A	3404-000165	SWITCH-TACT;12V,50mA,160gf,6x6mm,SPST		SA
#N/A	3405-001073	SWITCH-MICRO;125V,5A,40GF,SPDT		SNA
#N/A	3711-003411	HEADER-BOARD TO CABLE;BOX,5P,1R,2mm,STRA		SNA
#N/A	JC07-00003A	LCD-DISPLAY(XEV);VHX1620BHRC9,SCX-5312F/		SA
#N/A	JC39-00306A	CBF HARNESS-LCD;CLP-500,WIRE,UL2877,14-1		SA
#N/A	JC39-00560A	HARNESS-SWITCH;SCX-4200,CBF,UL 1061,4P,2		SA
#N/A	JC39-40511A	CBF HARNESS;ML-80,JUMPER,AWG22,52mm,SILV		SA
#N/A	JC41-00171C	PCB-PTL (1LAYER);SCX-4100,FR-1,1,-,1.6T,		SNA
#N/A	JC41-00324A	PCB-SWITCH;SCX-4200,FR-1,1,-,1.6T,33X25M		SNA
#N/A	JC61-00597A	BRACKET-P-BLADE;ML-1710,SPCC+NI,1.2,242,		SNA
#N/A	JC66-00012A	GEAR-OPC R;SF-5100,POM(M90-44),BLK,M0.6,		SA
#N/A	JC66-00018A	GEAR-CHARGE ROLLER;SF-5100,POM(F20-03),M		SNA
#N/A	JC66-00524A	ROLLER-CHARGE ROLLER;ML-1510,NBR+SBR,12,		SNA
#N/A	JC70-00452A	IPR-SUS BLADE;ML-1710,SUS301,-,0.08T,16,		SNA
#N/A	JC71-00002A	NPR-EARTH OPC APOLLO;SF-5100,C5210P-H,0.		SNA
#N/A	JC72-00081A	PMO-BUSHING AGI L;SF-5100,POM,BLK,-,-,-,		SNA
#N/A	JC72-01317A	PPR-FILM AGITATOR SUB;ML-2550,PET SHEET		SNA
#N/A	JC72-01329A	PMO-AGITATOR_DOUBLE;ML-6060,ABS+GF20%,BL		SNA
#N/A	JC72-10924A	PPR-FILM AGITATOR;ML-5000,PET T0.1,NTR,-		SA
#N/A	JC72-10925A	PPR-FILM SUPPORT AGI;ML-5000,PET T0.3,NT		SNA
#N/A	JC73-40906A	RMO-SEAL AGITATOR;ML-5000,SANTOPRENE,-,-		SNA
#N/A	JC94-01098A	PHANTOM AU JC92-01760B		SNA
#N/A	0501-000279	TR-SMALL SIGNAL;KSA1182-Y,PNP,150mW,SOT-		SA
#N/A	0801-002469	IC-CMOS LOGIC;74HC14,SCHMITT INVERTER,TS		SA
#N/A	2007-000033	R-CHIP;0ohm,5%,1/4W,TP,3216		SA
#N/A	2007-000074	R-CHIP;100ohm,5%,1/10W,TP,1608		SA
#N/A	2007-000076	R-CHIP;330ohm,5%,1/10W,TP,1608		SA
#N/A	2007-000078	R-CHIP;1Kohm,5%,1/10W,TP,1608		SA
#N/A	2007-000090	R-CHIP;10Kohm,5%,1/10W,TP,1608		SA
#N/A	2007-000094	R-CHIP;22Kohm,5%,1/10W,TP,1608		SA
#N/A	2007-000120	R-CHIP;680ohm,5%,1/10W,TP,1608		SA
#N/A	2007-000402	R-CHIP;150ohm,5%,1/10W,TP,1608		SA
#N/A	2007-000539	R-CHIP;200ohm,5%,1/10W,TP,1608		SA
#N/A	2203-000189	C-CER,CHIP;100nF,+80-20%,25V,Y5V,1608		SA
#N/A	2203-000236	C-CER,CHIP;0.1nF,5%,50V,C0G,1608		SA
#N/A	2203-000357	C-CER,CHIP;0.15nF,5%,50V,C0G,1608		SA
#N/A	2203-000626	C-CER,CHIP;0.022nF,5%,50V,C0G,1608		SA
#N/A	2203-000998	C-CER,CHIP;0.047nF,5%,50V,C0G,1608		SA
#N/A	2203-005819	C-CER,CHIP;1000nF,+80-20%,16V,Y5V,-,1608		SNA
#N/A	2404-001102	C-TA,CHIP;33uF,20%,16V,GP,TP,6032,-		SNA
#N/A	2802-001069	RESONATOR-CERAMIC;7.37MHz,0.5%,TP,4.7x4.		SNA
#N/A	JB13-00004A	IC ASIC-OPE;SF-3100,HT48C5,SSOP,48P,16.1		SA
#N/A	JC41-00325A	PCB-PANEL;SCX-4200,FR-1,1LAYER,-,1.6T,30		SNA